Autonics

COMMON Terminal Block (screwless type) ACL Series

INSTRUCTION MANUAL

[20-pin] [40-pin] [50-pin]

Thank you for choosing our Autonics product.
Please read the following safety considerations before use.

■ Safety Considerations

※Please observe all safety considerations for safe and proper product operation to avoid hazards.
※⚠ symbol represents caution due to special circumstances in which hazards may occur.

⚠ **Warning** Failure to follow these instructions may result in serious injury or death.
⚠ **Caution** Failure to follow these instructions may result in personal injury or product damage.

⚠ Warning

1. Fail-safe device must be installed when using the unit with machinery that may cause serious injury or substantial economic loss. (e.g. nuclear power control, medical equipment, ships, vehicles, railways, aircraft, combustion apparatus, safety equipment, crime/disaster prevention devices, etc.)
Failure to follow this instruction may result in fire, personal injury, or economic loss.
2. Do not connect, repair, or inspect the unit, or remove connector while connected to a power source.
Failure to follow this instruction may result in electric shock or fire.
3. Do not disassemble or modify the unit.
Failure to follow this instruction may result in electric shock or fire.

⚠ Caution

1. Use the unit within the rated specifications.
Failure to follow this instruction may result in fire or product damage.
2. Use dry cloth to clean the unit, and do not use water or organic solvent.
Failure to follow this instruction may result in electric shock or fire.
3. Do not use the unit in the place where flammable/explosive/corrosive gas, humidity, direct sunlight, radiant heat, vibration, impact, or salinity may be present.
Failure to follow this instruction may result in fire or explosion.
4. Keep metal chip, dust, and wire residue from flowing into the unit.
Failure to follow this instruction may result in fire or product damage.

■ Model

Model	Item	Terminal type	The number of terminal	Common type
ACL-20L	Common terminal block	Screwless	20	Left-Right Common
ACL-20T				Top-Bottom Common
ACL-40L			40	Left-Right Common
ACL-40T				Top-Bottom Common
ACL-50L			50	Left-Right Common
ACL-50T				Top-Bottom Common

■ Crimp Terminal Specifications

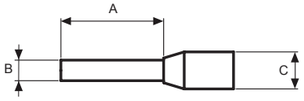

(unit: mm)

	A	B	C	Applicable wire
End Sleeve (Ferrule Terminal) crimp terminal	10 to 12.0	≤ 2 0	≤ 4.1	AWG22-16 (0.30 to 1.25mm²) (60℃ only)

※Use the UL certified crimp terminal.

■ Connecting Crimp Terminals

◎ **Connecting and removing end sleeve (ferrule terminal) crimp terminal at screwless type terminal block**

●Connecting
1) Push the end sleeve (ferrule terminal) crimp terminal towards direction ① to complete the connection.

●Removing
1) Press and hold the catch above the terminal in direction ② with a flathead screwdriver.
2) Pull and remove the end sleeve (ferrule terminal) crimp terminal towards direction ③.

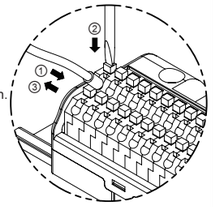

※The above specifications are subject to change and some models may be discontinued without notice.
※Be sure to follow cautions written in the instruction manual and the technical descriptions (catalog, homepage).

■ Specifications

Model		ACL-20L	ACL-40L	ACL-50L	ACL-20T	ACL-40T	ACL-50T
Rated voltage		250VDC⎓, 250VAC～ 50/60Hz					
Rated current		≤10A					
Common type		Left +COM / Right -COM			Top +COM / Bottom -COM		
Terminal type		Screwless					
The number of terminal		20	40	50	20	40	50
Terminal pitch		5 0mm					
Applicable wires	Solid wire	Ø0.6 to Ø1 25mm (60℃ only)					
	Stranded wire	UL: AWG22-16 (0.30 to 1.25mm²) (60℃ only)					
Stripped wire length		8 to 10mm					
Insulation resistance		≥1,000MΩ (at 500VDC megger)					
Dielectric strength		3,000VAC 50/60Hz for 1 minute (between open terminals)					
Vibration	Mechanical	0.75mm amplitude at frequency of 10 to 55Hz (for 1 min) in each X, Y, Z direction for 2 hours					
	Malfunction	0.75mm amplitude at frequency of 10 to 55Hz (for 1 min) in each X, Y, Z direction for 10 minutes					
Shock	Mechanical	1,000m/s² (approx. 100G) in each X, Y, Z direction for 3 times					
	Malfunction	100m/s² (approx. 10G) in each X, Y, Z direction for 3 times					
Environment	Ambient temp.	-15 to 55℃, storage: -25 to 65℃					
	Ambient humi.	35 to 85%RH, storage: 35 to 85%RH					
Material		Terminal: polyamide 66, conductive plate: copper, tin plated, case: polycarbonate, base: polycarbonate					
Protection structure		IP20 (IEC standard)					
Approval		CE, UL					
Weight※1		Approx. 71g (approx. 42g)	Approx. 146g (approx. 79g)	Approx. 164g (approx. 97g)	Approx. 71g (approx. 42g)	Approx. 146g (approx. 79g)	Approx. 164g (approx. 97g)

※1: The weight includes packaging. The weight in parenthesis is for unit only.
※Environment resistance is rated at no freezing or condensation.

■ Dimensions

(unit: mm)

● **ACL-20L(T)**

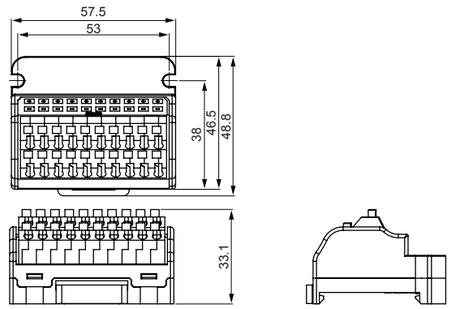

● **ACL-40L(T) / ACL-50L(T)**

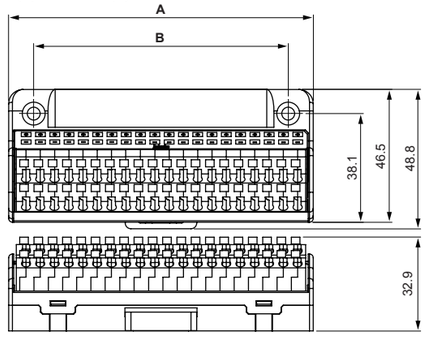

(unit: mm)

Model	A	B
ACL-40L(T)	106 5	89
ACL-50L(T)	131 5	102

■ Installation

1. Mounting and removal at DIN rail

● Mounting
1) Pull the rail lock towards direction ①.
2) Attach the DIN rail connection part onto the DIN rail.
3) Push the unit towards direction ②, then push the rail lock in to lock toward the unit.

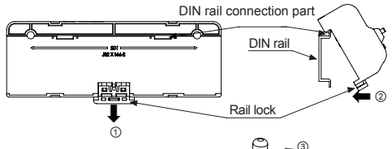

● Removal
1) Insert a screwdriver into the rail lock hole and push it towards direction ③.
2) Remove the unit by pulling the unit towards direction ④.

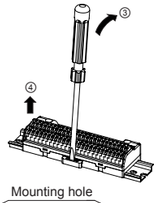

2. Mounting with screws

1) The unit can be mounted on panel using the mounting hole.
2) M4×10mm spring washer screws are recommended for installation. When using flat washers, use Ø8mm diameter washers. The tightening torque should be from 1.0 to 1.5N m.

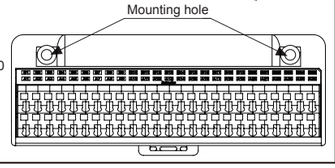

■ Wire Connections

● **ACL-20L**

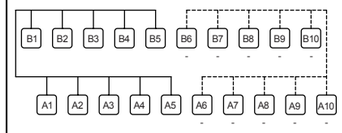

● **ACL-40L**

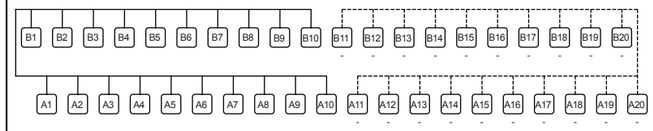

● **ACL-50L**

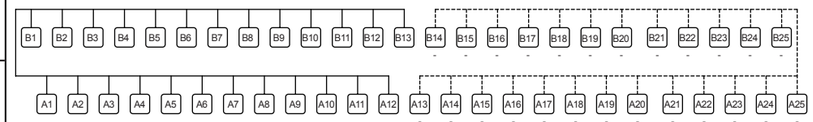

● **ACL-20T**

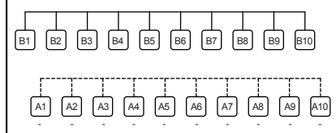

● **ACL-40T**

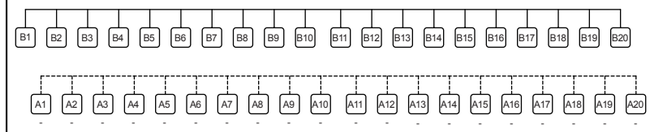

● **ACL-50T**

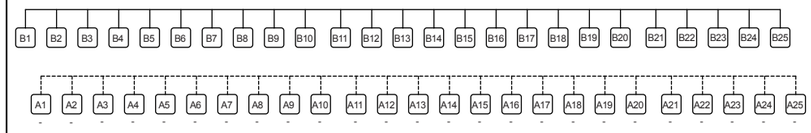

■ Cautions during Use

1. Follow instructions in 'Cautions during Use'. Otherwise, it may cause unexpected accidents.
2. Keep away from high voltage lines or power lines to prevent inductive noise.
In case installing power line and input signal line closely, use line filter or varistor at power line and shielded wire at input signal line.
Do not use near the equipment which generates strong magnetic force or high frequency noise.
3. This unit may be used in the following environments.
①Indoors (in the environment condition rated in 'Specifications')
②Altitude max. 2,000m
③Pollution degree 2
④Installation category II

■ Major Products

■ Photoelectric Sensors
■ Fiber Optic Sensors
■ Door Sensors
■ Door Side Sensors
■ Area Sensors
■ Proximity Sensors
■ Pressure Sensors
■ Rotary Encoders
■ Connector/Sockets
■ Switching Mode Power Supplies
■ Control Switches/Lamps/Buzzers
■ /O Terminal Blocks & Cables
■ Stepper Motors/Drivers/Motion Controllers
■ Graphic/Logic Panels
■ Field Network Devices
■ Laser Marking System (Fiber, Co_2, Nd:YAG)
■ Laser Welding/Cutting System
■ Temperature Controllers
■ Temperature/Humidity Transducers
■ SSRs/Power Controllers
■ Counters
■ Timers
■ Panel Meters
■ Tachometer/Pulse(Rate)Meters
■ Display Units
■ Sensor Controllers